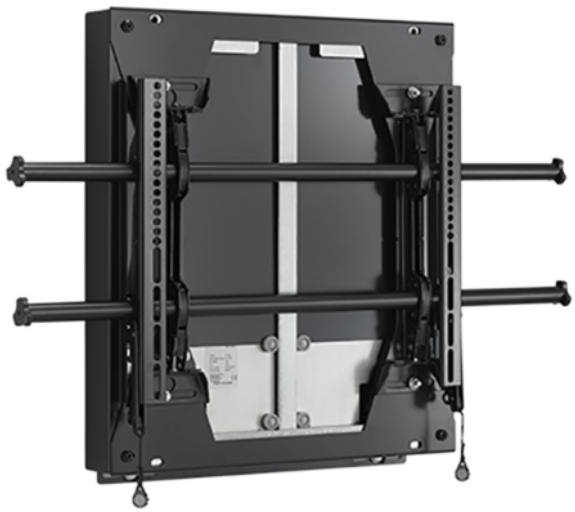

Chief Medium Fusion Dynamic Height Adjustable Wall Mount

Model: MSD1U

Manufacturer: CHIEF

EAN: 841872168197

Product Code: 1051858

R26,555

deal for interactive applications, Fusion mounts with dynamic height adjust capability create better accessibility to technology in the boardroom and the classroom. The height adjustable solution provides ultra-smooth and fast vertical travel with almost no effort. Ships fully assembled with the LSM1U mount to make this a complete aesthetic solution.

Easy to install. Easy to adjust.

- Height adjustable box allows up to 15.75” (400 mm) of vertical adjustment instantly
- ControlZone for post-installation fine-tuning of height and leveling
- Set screws keep the mount rigid, stable and secure throughout the life of the installation
- Built in cable stand provides easy access under the screen
- ClickConnect offers an audible click when the screen safely engages with the mount

The product information provided is for reference purposes only. Technical specifications, photos, descriptions and prices may change without prior notice. The manufacturer and seller are not responsible for possible data discrepancies or typographical errors. We recommend checking the current information before purchasing.
itworkup.co.za | sales@itworkup.co.za | +27 (11)541-9950

- A full line of accessories can be installed with the mount and the entire unit can be adjusted together
- Spring system tested to 60,000 cycles and 10 years of use
- Integrated security flag

The product information provided is for reference purposes only. Technical specifications, photos, descriptions and prices may change without prior notice. The manufacturer and seller are not responsible for possible data discrepancies or typographical errors. We recommend checking the current information before purchasing.
itworkup.co.za | sales@itworkup.co.za | +27 (11)541-9950