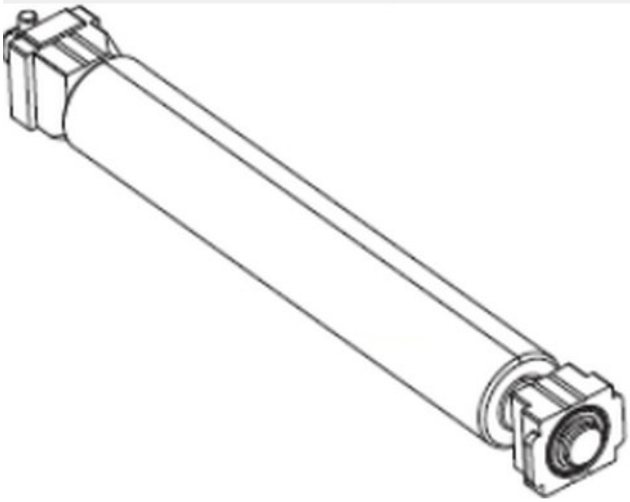

Zebra P1058930-081 printer roller

Model: P1058930-081

Manufacturer: ZEBRA

EAN: 5052184500086

Product Code: 1054238

R3,206

A platen roller is a vital printer component that helps create the optimum amount of pressure to drive labels through the printer, ensuring clean and crisp printouts. Zebra platen rollers and platen roller repairs kits will help ensure continued top-notch printer performance and avoid costly downtime. A worn or damaged platen roller should be replaced or repaired immediately.

The product information provided is for reference purposes only. Technical specifications, photos, descriptions and prices may change without prior notice. The manufacturer and seller are not responsible for possible data discrepancies or typographical errors. We recommend checking the current information before purchasing.