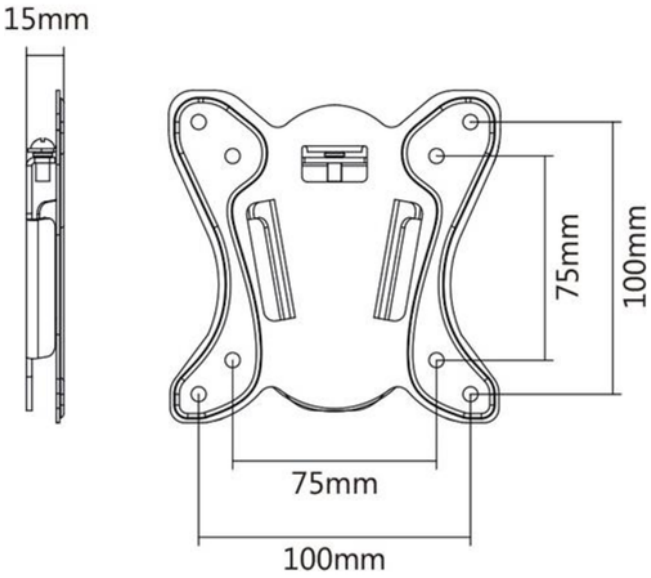

VALUE Mounting Kit (Wall Plate Adapter Plate)

Model: 17.99.1141

Manufacturer: VALUE

EAN: 7611990150106

Product Code: 456666

R924

The product information provided is for reference purposes only. Technical specifications, photos, descriptions and prices may change without prior notice. The manufacturer and seller are not responsible for possible data discrepancies or typographical errors. We recommend checking the current information before purchasing.
itworkup.co.za | sales@itworkup.co.za | +27 (11)541-9950