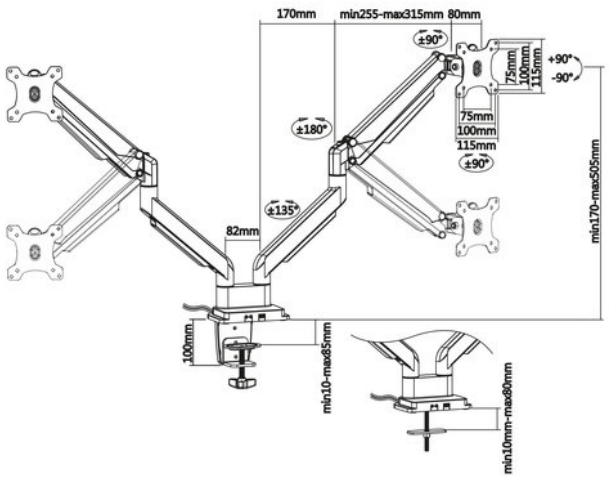

InLine desk mount w/ lift and USB/Audio, 2 monitors up to 81cm (32"),black

Model: 23171B

Manufacturer: INLINE

EAN: 4043718293100

Product Code: 460550

R2,852

The product information provided is for reference purposes only. Technical specifications, photos, descriptions and prices may change without prior notice. The manufacturer and seller are not responsible for possible data discrepancies or typographical errors. We recommend checking the current information before purchasing.
itworkup.co.za | sales@itworkup.co.za | +27 (11)541-9950