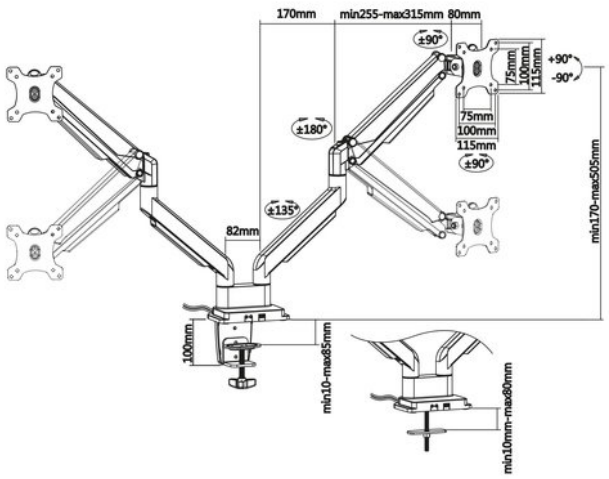

InLine desk mount w/ lift and USB/Audio, 2 monitors up to 81cm (32") 9kg,silver

Model: 23171S

Manufacturer: INLINE

EAN: 4043718306046

Product Code: 460551

R3,206

The product information provided is for reference purposes only. Technical specifications, photos, descriptions and prices may change without prior notice. The manufacturer and seller are not responsible for possible data discrepancies or typographical errors. We recommend checking the current information before purchasing.
itworkup.co.za | sales@itworkup.co.za | +27 (11)541-9950