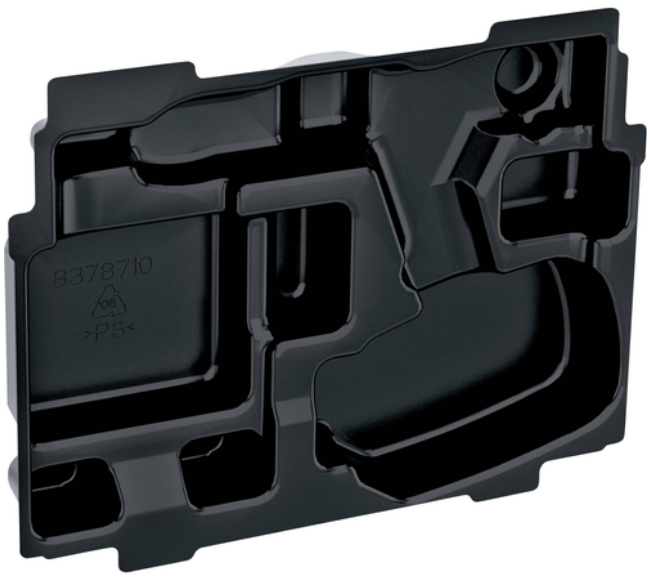

Makita 837871-0 Thermoformed Part for MAKPAC

Model: 837871-0

Manufacturer: MAKITA

EAN: 088381525992

Product Code: 474204

R1,280

The product information provided is for reference purposes only. Technical specifications, photos, descriptions and prices may change without prior notice. The manufacturer and seller are not responsible for possible data discrepancies or typographical errors. We recommend checking the current information before purchasing.
itworkup.co.za | sales@itworkup.co.za | +27 (11)541-9950